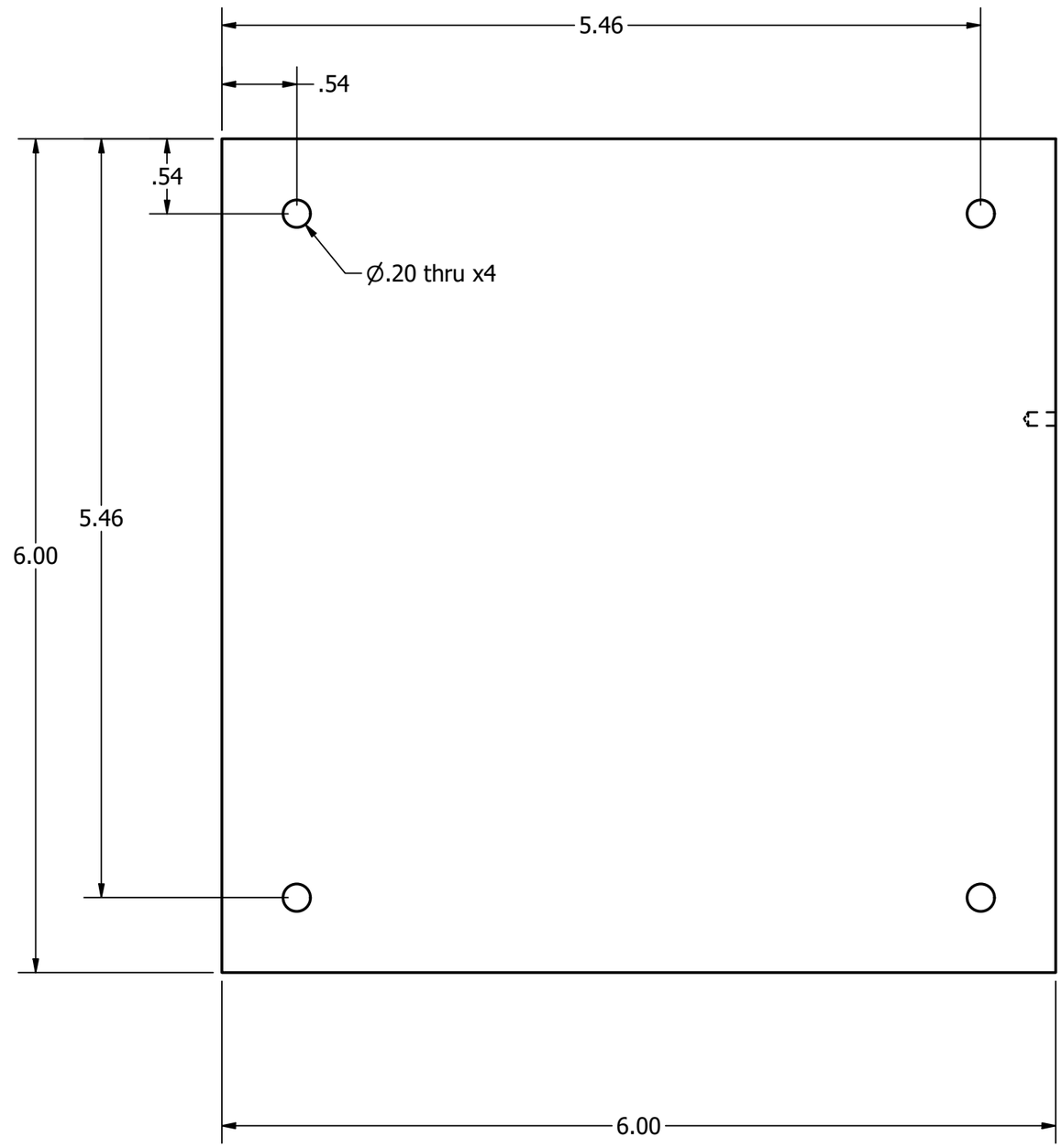

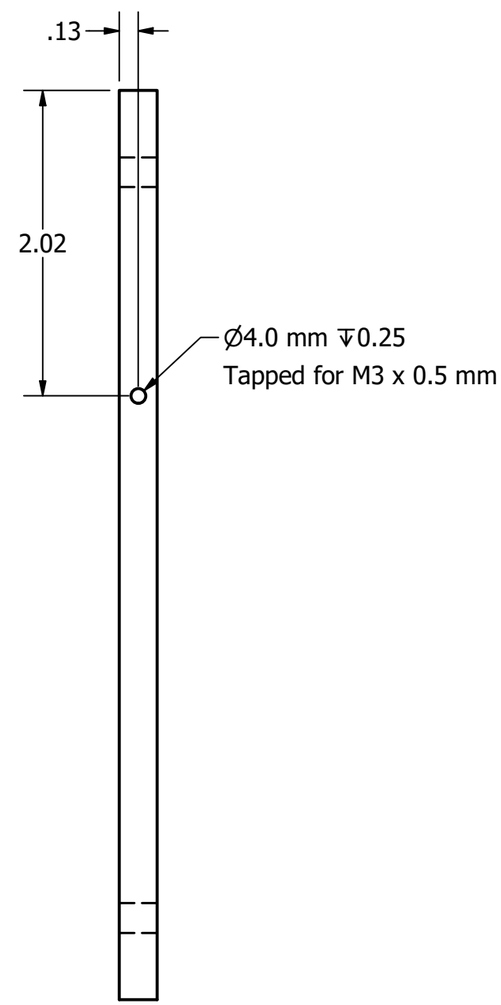

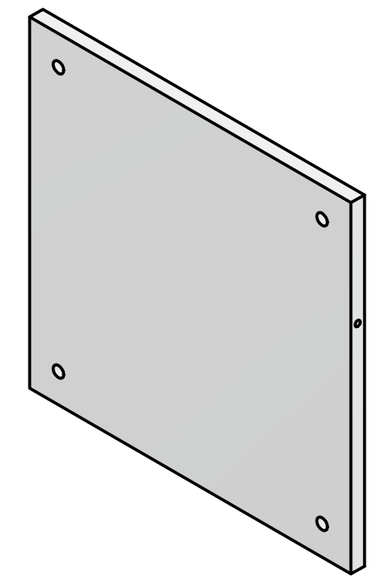

MATERIAL: Steel	UNLESS OTHERWISE NOTED INTERPRET DRAWING PER ASME Y14.5-2018 **DIMENSIONS ARE IN INCHES**	ZT Group — Nano Heat Energy; Cornell Engineering
CHECKED BY	LINEAR TOLERANCES: .X ± .05, .XX ± .02, .XXX ± .005	PART ASSEMBLY/PROJECT: Dry Transfer Stage
APPROVED BY	SURFACE ROUGHNESS: 63 ✓ MICROINCHES OR BETTER	PART NAME: Plate
APPROVAL DATE	ANGULAR TOLERANCES: ± 0.5 DEGREES	DRAWN BY: Tyler Wisniewski
	DEBURR AND REMOVE SHARP EDGES	SIZE B; SCALE 1 : 1; SHEET 1 OF 1